Fluid-Structure Interaction in Aluminum Extrusion

Introduction

Out of all metals, the most frequently extruded is aluminum. Aluminum extrusion entails using a hydraulic ram to squeeze an aluminum bar through a die. This process will form the metal into a particular shape. Extruded aluminum is used in many manufacturing applications, such as building components for example. In massive forming processes like rolling or extrusion, metal alloys are deformed in a hot solid state with material flowing under ideally plastic conditions. Such processes can be simulated effectively using computational fluid dynamics, where the material is considered as a fluid with a very high viscosity that depends on velocity and temperature. Internal friction of the moving material acts as a heat source, so that the heat transfer equations are fully coupled with those ruling the fluid dynamics part. This approach is especially advantageous when large deformations are involved.

This model is adapted from a benchmark study in Ref. 1. The original benchmark solves a thermal-structural coupling, because it is common practice in the simulation of such processes to use specific finite element codes that have the capability to couple the structural equations with heat transfer. The alternative scheme discussed here couples non-Newtonian flow with heat transfer equations. In addition, because it is useful to know the stress in the die due to fluid pressure and thermal loads, the model adds a structural mechanics analysis.

The die design is courtesy of Compes S.p.A., while the die geometry, boundary conditions, and experimental data are taken from Ref. 1.

Note: This model requires the Heat Transfer Module and the Structural Mechanics Module. In addition, the model uses the Material Library.

Model Definition

The model considers steady-state conditions, assuming a billet of infinite length flowing through the die. In the actual process, the billet is pushed by the ram through the die and its volume is continuously reducing.

Figure 1 shows the original complete geometry with four different profiles. To have a model with reasonable dimensions, consider only a quarter of the original geometry. The simplification involved in neglecting the differences between the four profiles does not affect the numerical scheme proposed. Figure 2 shows the resulting model

geometry.

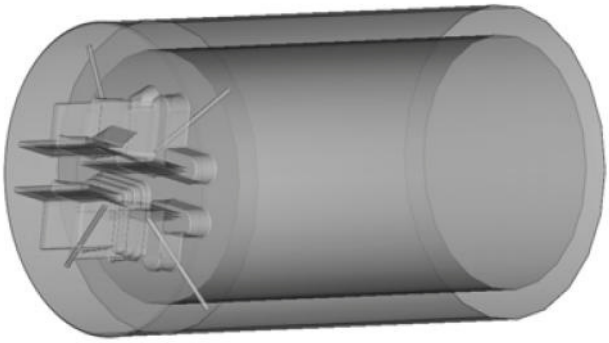

Figure 1: Original benchmark geometry.

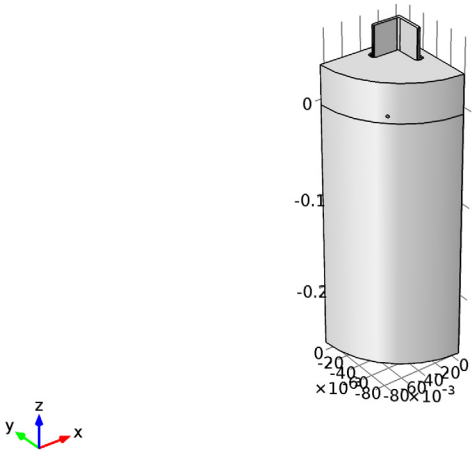

Figure 2: Quarter of the original geometry considered in the model.

MATERIAL PROPERTIES

The documentation for the benchmark model (Ref. 1) serves as the data source for properties of the two main materials: AISI steel for the die and the container (the ram is not considered here) and aluminum for the billet.

Structural Analysis

Because only the steel part is active in the structural analysis, consider a simple linear elastic behavior where the elastic properties are those of the material H11 mod (AISI 610) that can be found in the COMSOL Multiphysics Material Library.

Heat Transfer Analysis

The benchmark model uses the following properties for aluminum and steel:

ALUMINUM	VALUE	DESCRIPTION
k_{al}	210 N/(s·K)	Thermal conductivity
ρ_{al}	2700 kg/m^3	Density
$C_{p\mathrm{al}}$	2.94 N/(mm^2·K)/ρ_{al}	Specific heat

STEEL	VALUE	DESCRIPTION
k_{fe}	24.33 N/(s·K)	Thermal conductivity
ρ_{fe}	7850 kg/m^3	Density
$C_{p\mathrm{fe}}$	4.63 N/(mm^2·K)/ρ_{fe}	Specific heat

Non-Newtonian Flow

The properties of the aluminum were experimentally determined and then checked using literature data for the same alloy and surface state. However the benchmark proposes an experimental constitutive law, suited for the structural mechanics codes usually used to simulate such processes, in the form of the flow stress data. For this model this requires a recalculation of the constitutive law to derive a general expression for the viscosity. The equivalent von Mises stress, σ_{eqv}, can be defined in terms of the total contraction of the deviatoric stress tensor as

$$\sigma_{\mathrm{eqv}} = \sqrt{\frac{3}{2}\tau:\tau}$$

or, using $\tau = 2\eta\dot{\varepsilon}$ where $\dot{\varepsilon}$ is the strain rate and η is the viscosity, as

$$\sigma_{\mathrm{eqv}} = \sqrt{6\eta^2\dot{\varepsilon}:\dot{\varepsilon}} \tag{1}$$

Introducing the equivalent strain rate

$$\dot{\phi}_{\mathrm{eqv}} \equiv \sqrt{\frac{2}{3}\dot{\varepsilon}:\dot{\varepsilon}}$$

Equation 1 can be expressed as

$$\sigma_{eqv} = 3\eta\dot{\phi}_{eqv}$$

The strain rate tensor is defined as (Ref. 2)

$$\dot{\varepsilon} = \frac{\nabla\mathbf{u} + (\nabla\mathbf{u})^T}{2} = \frac{1}{2}\dot{\gamma}$$

The shear rate $\dot{\gamma}$ is defined as

$$\dot{\gamma} = |\dot{\boldsymbol{\gamma}}| = \sqrt{\frac{1}{2}\dot{\boldsymbol{\gamma}}:\dot{\boldsymbol{\gamma}}}$$

so that

$$\dot{\phi}_{eqv} = \frac{1}{\sqrt{3}}\dot{\gamma}$$

The flow rule

$$\sigma_{eqv} = \kappa_f$$

states that plastic yielding occurs if the equivalent stress, σ_{eqv}, reaches the flow stress, κ_f. The viscosity is defined as (see Ref. 2 for further details)

$$\eta = \frac{\kappa_f}{3\dot{\phi}_{eqv}}$$

The organizers of the benchmark propose specific flow-stress data expressed in terms of a generalized Zener-Hollomon function

$$\eta = \frac{\operatorname{asinh}\left(\left(\frac{Z}{A}\right)^{\frac{1}{n}}\right)}{\sqrt{3}\alpha\dot{\gamma}}$$

where $A = 2.39\cdot10^8\ \mathrm{s}^{-1}$, $n = 2.976$, $\alpha = 0.052\ \mathrm{MPa}^{-1}$, and

$$Z = \frac{1}{\sqrt{3}}\dot{\gamma}e^{\left(\frac{Q}{RT}\right)}$$

with $Q = 153$ kJ/mol and $R = 8.314$ J/(K·mol).

SOURCES, INITIAL CONDITIONS, AND BOUNDARY CONDITIONS

Structural Analysis

Because the model geometry is a quarter of the actual geometry, use symmetric boundary conditions for the two orthogonal planes. On the external surfaces of the die, apply roller boundary conditions because in reality other dies, not considered here, are present to increase the system's stiffness.

The main loads are the thermal loads from the heat transfer analysis and pressures from the fluid dynamics analysis.

Heat Transfer Analysis

For the billet, use a volumetric heat source related to the viscous heating effect.

The external temperature of the ram and the die is held constant at 450 °C (723 K). The ambient temperature is 25 °C (298 K). For the heat exchange between aluminum and steel, use the heat transfer coefficient of 11 N/(s·mm·K). Also consider convective heat exchange with air outside the profiles with a fixed convective heat transfer coefficient of 15 W/(m^2·K).

Apply initial temperatures as given in the following table:

PART	VALUE
Ram	380 °C (653 K)
Container	450 °C (723 K)
Billet	460 °C (733 K)
Die	404 °C (677 K)

Non-Newtonian Flow

At the inlet, the ram moves with a constant velocity of 0.5 mm/s. Impose this boundary condition by simply applying a constant inlet velocity. At the outlet, a normal stress condition with zero external pressure applies. On the surfaces placed on the two symmetry planes, use symmetric conditions. Finally, apply slip boundary conditions on the boundaries placed outside the profile.

Results and Discussion

The general response of the proposed numerical scheme, especially in the zone of the profile, is in good accordance with the experience of the designers. A comparison between the available experimental data and the numerical results of the simulation shows good agreement.

On the basis of the results from the simulation, the engineer can improve the preliminary die design by adjusting relevant physical parameters and operating conditions. For this purpose, the volume plot in Figure 3 showing the temperature field inside the profile gives important information. Furthermore, the combined streamline and slice plot in Figure 4 reveals any imbalances in the velocity field that could result in a crooked profile. A proper design should also ensure that different parts of the profile travel at the same speed. Figure 5 shows the von Mises equivalent stress in the steel part considering the thermal load and the pressure load due to the presence of the fluid.

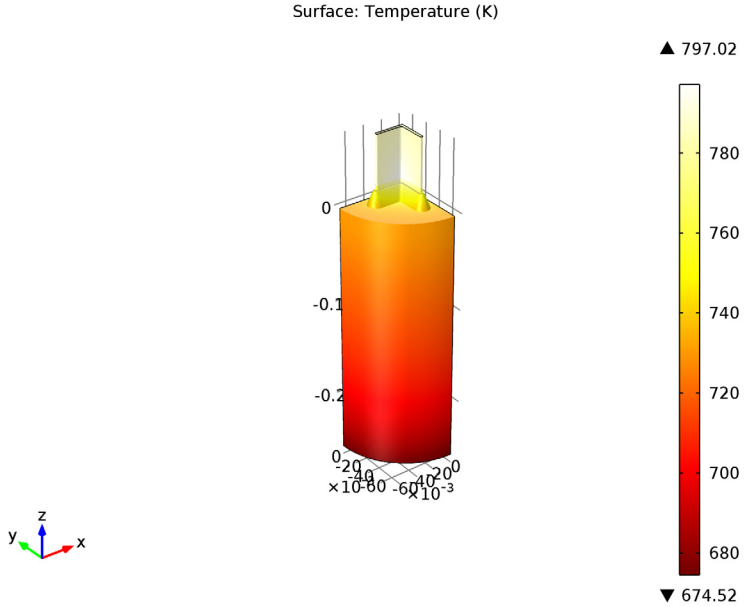

Figure 3: Temperature distribution in the billet.

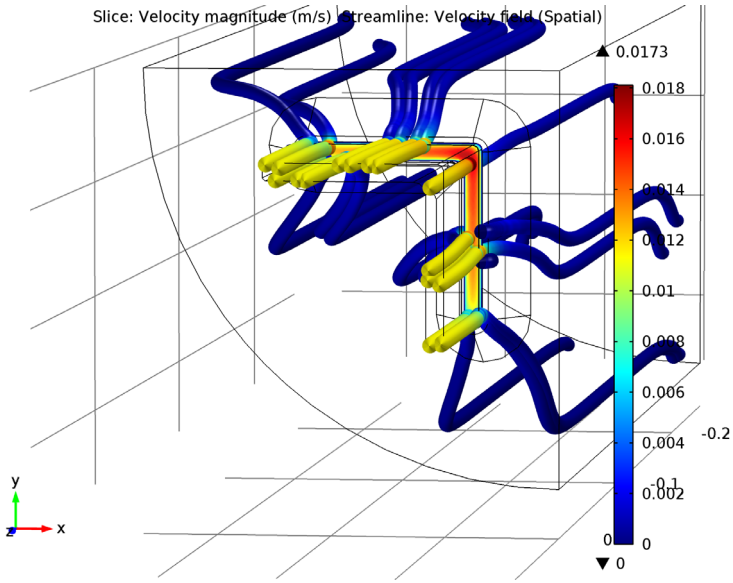

Figure 4: Velocity field and streamlines at the profile section.

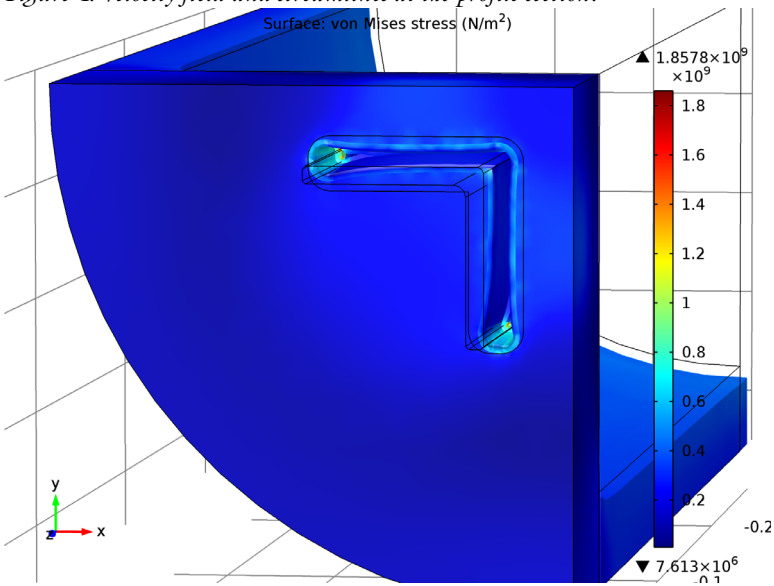

Figure 5: Equivalent von Mises stress distribution in the container.

References

1. M. Schikorra, L. Donati, L. Tomesani, and A.E. Tekkaya, "The Extrusion Benchmark 2007," *Proceedings of the Extrusion Workshop 2007 and 2nd Extrusion Benchmark Conference*, Bologna, Italy, http://diemtech.ing.unibo.it/extrusion07.

2. E.D. Schmitter, "Modelling massive forming processes with thermally coupled fluid dynamics," *Proceedings of the COMSOL Multiphysics User's Conference 2005 Frankfurt*, Frankfurt, Germany.

Model Library path: `Heat_Transfer_Module/Thermal_Processing/aluminum_extrusion_fsi`

Modeling Instructions

From the **File** menu, choose **New**.

NEW

1 In the **New** window, click the **Model Wizard** button.

MODEL WIZARD

1 In the **Model Wizard** window, click the **3D** button.

2 In the **Select physics** tree, select **Heat Transfer>Conjugate Heat Transfer>Laminar Flow (nitf)**.

3 Click the **Add** button.

4 In the **Select physics** tree, select **Structural Mechanics>Solid Mechanics (solid)**.

5 Click the **Add** button.

6 Click the **Study** button.

7 In the tree, select **Preset Studies for Selected Physics>Stationary**.

8 Click the **Done** button.

GEOMETRY 1

Import 1

1 On the **Home** toolbar, click **Import**.

2 In the **Import** settings window, locate the **Import** section.

3 Click the **Browse** button.

4 Browse to the model's Model Library folder and double-click the file `aluminum_extrusion_fsi.mphbin`.

5 Click the **Import** button.

6 Click the **Zoom Extents** button on the Graphics toolbar.

You should now see the following geometry.

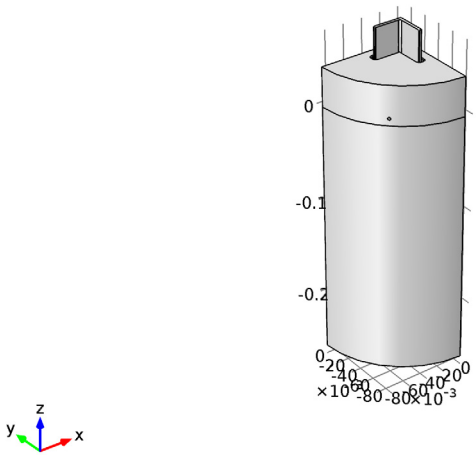

GLOBAL DEFINITIONS

Parameters

1 On the **Home** toolbar, click **Parameters**.

2 In the **Parameters** settings window, locate the **Parameters** section.

3 In the table, enter the following settings:

Name	Expression	Value	Description
D_alfe	1[mm]	0.001000 m	Thickness of the high conductive layer
Heat_alfe	11[N/(s*mm*K)]	1.100E4 W/(m²·K)	Aluminum-steel heat exchange coefficient
T_billet	460[degC]	733.2 K	Billet temperature

Name	Expression	Value	Description
T_container	450[degC]	723.2 K	Container temperature
T_ram	380[degC]	653.2 K	Ram temperature
T_pd1	404[degC]	677.2 K	Initial temperature around thermocouple at point PD1
V_ram	0.5[mm/s]	5.000E-4 m/s	Ram velocity
P_init	0[bar]	0 Pa	External reference pressure
T_air	25[degC]	298.2 K	Ambient temperature
Q_eta	153000[J/mol]	1.530E5 J/mol	Parameter Q for the generalized Zener-Hollomon function
n_eta	2.976	2.976	Parameter n for the generalized Zener-Hollomon function
A_eta	2.39e8[1/s]	2.390E8 1/s	Parameter A for the generalized Zener-Hollomon function
alpha_eta	0.0521[1/MPa]	5.210E-8 1/Pa	Parameter alpha for the generalized Zener-Hollomon function
H_conv	15	15.00	Convective heat exchange coefficient with air
F	sqrt(1/3)	0.5774	Factor for the conversion of the shear rate to COMSOL's definition

DEFINITIONS

Variables 1

1 In the **Model Builder** window, under **Component 1** right-click **Definitions** and choose **Variables**.

2 In the **Variables** settings window, locate the **Variables** section.

3 In the table, enter the following settings:

Name	Expression	Unit	Description
`Z_eta`	`F*nitf.sr*exp(Q_eta/(R_const*T))`	1/s	`Zener-Hollomon parameter`
`mu_al`	`asinh((Z_eta/A_eta)^(1/n_eta))/(3*alpha_eta*F*nitf.sr+sqrt(eps))`	Pa·s	`Viscosity of aluminum`

Create the selections to simplify the model specification.

Explicit 1

1 On the **Definitions** toolbar, click **Explicit**.

2 In the **Explicit** settings window, locate the **Input Entities** section.

3 From the **Geometric entity level** list, choose **Boundary**.

4 Select Boundaries 35–38, 42, 43, 48, 49, 51, 53, 68, 69, 76–79, 84, 85, 91, 93, 100, 101, 103, and 105 only.

5 Right-click **Component 1>Definitions>Explicit 1** and choose **Rename**.

6 Go to the **Rename Explicit** dialog box and type `Outside` in the **New name** edit field.

7 Click **OK**.

Explicit 2

1 On the **Definitions** toolbar, click **Explicit**.

2 In the **Explicit** settings window, locate the **Input Entities** section.

3 From the **Geometric entity level** list, choose **Boundary**.

4 Select Boundaries 8, 11, 14, 15, 19, 20, 24, 29–34, 41, 47, 50, 56–58, 62, 67, 70, 71, 74, 75, 83, 86–90, 99, 102, 106, and 107 only.

5 Right-click **Component 1>Definitions>Explicit 2** and choose **Rename**.

6 Go to the **Rename Explicit** dialog box and type `Interior` in the **New name** edit field.

7 Click **OK**.

Before creating the materials for the model, specify the fluid and solid domains. Using this information, the software can detect which material properties are needed.

CONJUGATE HEAT TRANSFER

Fluid 1

Select Domains 3 and 4 only.

SOLID MECHANICS

1 In the **Model Builder** window, under **Component 1** click **Solid Mechanics**.

2 In the **Solid Mechanics** settings window, locate the **Domain Selection** section.

3 Click **Clear Selection**.

4 Select Domains 1 and 2 only.

Now, define the material for each domain.

MATERIALS

On the **Home** toolbar, click **Add Material**.

ADD MATERIAL

1 Go to the **Add Material** window.

2 In the tree, select **Material Library>Tool Steels>H11 mod (AISI 610)>H11 mod (AISI 610) [solid]>H11 mod (AISI 610) [solid,triple tempered]**.

3 In the **Add material** window, click **Add to Component**.

MATERIALS

H11 mod (AISI 610) [solid,triple tempered]

1 In the **Model Builder** window, under **Component 1>Materials** click **H11 mod (AISI 610) [solid,triple tempered]**.

2 Select Domains 1 and 2 only.

3 In the **Material** settings window, locate the **Material Contents** section.

4 In the table, enter the following settings:

Property	Name	Value	Unit	Property group
Heat capacity at constant pressure	Cp	`4.63[N/(mm^2*K)]/rho(T[1/K])[kg/m^3]`	J/(kg·K)	Basic

Because the heat capacity only enters the transient heat transfer equation, this setting does not affect the steady-state simulation described here; it is provided for completeness in case you will to extend the model to perform transient simulations.

Material 2

1 In the **Model Builder** window, right-click **Materials** and choose **New Material**.

2 Select Domains 3 and 4 only.

3 In the **Material** settings window, locate the **Material Contents** section.

4 In the table, enter the following settings:

Property	Name	Value	Unit	Property group
Density	rho	`2700`	kg/m³	Basic
Dynamic viscosity	mu	`mu_al`	Pa·s	Basic
Thermal conductivity	k	`210`	W/(m·K)	Basic
Heat capacity at constant pressure	Cp	`2.94[N/(mm^2*K)]/rho`	J/(kg·K)	Basic
Ratio of specific heats	gamma	`1`	1	Basic

5 Right-click **Component 1>Materials>Material 2** and choose **Rename**.

6 Go to the **Rename Material** dialog box and type `Billet` in the **New name** edit field.

7 Click **OK**.

With the materials defined, you set up the remain physics of the model.

CONJUGATE HEAT TRANSFER

In the current model the viscosity in the fluid flow part is large, which implies that the model is diffusion dominated. Pseudo time stepping works poorly for this model because it is based on the scale of the convective flux.

1 In the **Model Builder** window's toolbar, click the **Show** button and select **Advanced Physics Options** in the menu.

2 In the **Conjugate Heat Transfer** settings window, click to expand the **Advanced settings** section.

3 Locate the **Advanced Settings** section. Find the **Pseudo time stepping** subsection. Clear the **Use pseudo time stepping for stationary equation form** check box.

Initial Values 1

1 In the **Model Builder** window, under **Component 1>Conjugate Heat Transfer** right-click **Fluid 1** and choose **Viscous Heating**.

2 In the **Initial Values** settings window, locate the **Initial Values** section.

3 In the p edit field, type `P_init`.

4 In the T edit field, type `T_container`.

Symmetry, Flow 1

1 On the **Physics** toolbar, click **Boundaries** and choose **Symmetry, Flow**.

2 Select Boundaries 9 and 112 only.

Inlet 1

1 On the **Physics** toolbar, click **Boundaries** and choose **Inlet**.

2 Select Boundary 10 only.

3 In the **Inlet** settings window, locate the **Velocity** section.

4 Click the **Velocity field** button.

5 Specify the $\mathbf{u}_0$ vector as

0	x
0	y
V_ram	z

Wall 2

1 On the **Physics** toolbar, click **Boundaries** and choose **Wall**.

2 In the **Wall** settings window, locate the **Boundary Selection** section.

3 From the **Selection** list, choose **Outside**.

4 Locate the **Boundary Condition** section. From the **Boundary condition** list, choose **Slip**.

Outlet 1

1 On the **Physics** toolbar, click **Boundaries** and choose **Outlet**.

2 Select Boundary 40 only.

3 In the **Outlet** settings window, locate the **Pressure Conditions** section.

4 In the p_0 edit field, type `P_init`.

Temperature 1

1 On the **Physics** toolbar, click **Boundaries** and choose **Temperature**.

2 Select Boundaries 2, 5, and 7 only.

3 In the **Temperature** settings window, locate the **Temperature** section.

4 In the T_0 edit field, type `T_container`.

Heat Flux 1

1 On the **Physics** toolbar, click **Boundaries** and choose **Heat Flux**.

2 Select Boundary 10 only.

3 In the **Heat Flux** settings window, locate the **Heat Flux** section.

4 Click the **Inward heat flux** button.

5 In the h edit field, type `Heat_alfe`.

6 In the T_{ext} edit field, type `T_ram`.

Heat Flux 2

1 On the **Physics** toolbar, click **Boundaries** and choose **Heat Flux**.

2 In the **Heat Flux** settings window, locate the **Boundary Selection** section.

3 From the **Selection** list, choose **Outside**.

4 Locate the **Heat Flux** section. Click the **Inward heat flux** button.

5 In the h edit field, type `H_conv`.

6 In the T_{ext} edit field, type `T_air`.

Outflow 1

1 On the **Physics** toolbar, click **Boundaries** and choose **Outflow**.

2 Select Boundary 40 only.

Thin Thermally Resistive Layer 1

1 On the **Physics** toolbar, click **Boundaries** and choose **Thin Thermally Resistive Layer**.

2 In the **Thin Thermally Resistive Layer** settings window, locate the **Boundary Selection** section.

3 From the **Selection** list, choose **Interior**.

4 Locate the **Thin Thermally Resistive Layer** section. In the d_{s} edit field, type `D_alfe`.

5 From the k_{s} list, choose **User defined**. In the associated edit field, type `Heat_alfe*D_alfe`.

SOLID MECHANICS

1 In the **Model Builder** window, under **Component 1** click **Solid Mechanics**.

2 Select Domains 1 and 2 only.

For faster convergence use the linear elements. You can always refine the solution using the default quadratic elements.

3 In the **Model Builder** window's toolbar, click the **Show** button and select **Discretization** in the menu.

4 In the **Solid Mechanics** settings window, click to expand the **Discretization** section.

5 From the **Displacement field** list, choose **Linear**.

Linear Elastic Material 1

In the **Model Builder** window, expand the **Solid Mechanics** node.

Thermal Expansion 1

1 Right-click **Linear Elastic Material 1** and choose **Thermal Expansion**.

2 In the **Thermal Expansion** settings window, locate the **Model Inputs** section.

3 From the T list, choose **Temperature (nitf)**.

4 Locate the **Thermal Expansion Properties** section. In the T_{ref} edit field, type `T_container`.

Thermal Expansion 2

1 Right-click **Linear Elastic Material 1** and choose **Thermal Expansion**.

2 Select Domains 2–4 only.

3 In the **Thermal Expansion** settings window, locate the **Model Inputs** section.

4 From the T list, choose **Temperature (nitf)**.

5 Locate the **Thermal Expansion Properties** section. In the T_{ref} edit field, type `T_pd1`.

Roller 1

1 On the **Physics** toolbar, click **Boundaries** and choose **Roller**.

2 Select Boundaries 2, 5, and 7 only.

Symmetry 1

1 On the **Physics** toolbar, click **Boundaries** and choose **Symmetry**.

2 Select Boundaries 1, 4, 110, and 111 only.

Boundary Load 1

1 On the **Physics** toolbar, click **Boundaries** and choose **Boundary Load**.

2 Select Boundaries 8, 11, 14, 15, 19, 20, 24, 29–34, 41, 47, 50, 56–58, 62, 67, 70, 71, 74, 75, 83, 86–90, 99, 102, 106, and 107 only.

3 In the **Boundary Load** settings window, locate the **Coordinate System Selection** section.

4 From the **Coordinate system** list, choose **Boundary System 1**.

5 Locate the **Force** section. Specify the $\mathbf{F}_{\text{A}}$ vector as

0	t1
0	t2
-p	n

MESH 1

Free Triangular 1

1 In the **Model Builder** window, under **Component 1** right-click **Mesh 1** and choose **Free Triangular**.

2 Click the **Zoom Box** button on the Graphics toolbar.

3 Select Boundary 40 only.

Size 1

1 Right-click **Component 1>Mesh 1>Free Triangular 1** and choose **Size**.

2 In the **Size** settings window, locate the **Element Size** section.

3 Click the **Custom** button.

4 Locate the **Element Size Parameters** section. Select the **Maximum element size** check box.

5 In the associated edit field, type `0.0014`.

6 Select the **Curvature factor** check box.

7 In the associated edit field, type `0.2`.

8 Click the **Build Selected** button.

Swept 1

1 In the **Model Builder** window, right-click **Mesh 1** and choose **Swept**.

2 In the **Swept** settings window, locate the **Domain Selection** section.

3 From the **Geometric entity level** list, choose **Domain**.

4 Select Domain 4 only.

Distribution 1

1 Right-click **Component 1>Mesh 1>Swept 1** and choose **Distribution**.

2 In the **Distribution** settings window, locate the **Distribution** section.

3 In the **Number of elements** edit field, type `24`.

4 Click the **Build All** button.

Free Tetrahedral 1

In the **Model Builder** window, right-click **Mesh 1** and choose **Free Tetrahedral**.

Size 1

1 In the **Model Builder** window, under **Component 1>Mesh 1** right-click **Free Tetrahedral 1** and choose **Size**.

2 In the **Size** settings window, locate the **Element Size** section.

3 Click the **Custom** button.

4 Locate the **Element Size Parameters** section. Select the **Maximum element size** check box.

5 In the associated edit field, type `0.0085`.

Size 2

1 Right-click **Free Tetrahedral 1** and choose **Size**.

2 In the **Size** settings window, locate the **Geometric Entity Selection** section.

3 From the **Geometric entity level** list, choose **Boundary**.

4 Select Boundaries 12 and 13 only.

5 Locate the **Element Size** section. Click the **Custom** button.

6 Locate the **Element Size Parameters** section. Select the **Maximum element size** check box.

7 In the associated edit field, type `0.002`.

Size 3

1 Right-click **Free Tetrahedral 1** and choose **Size**.

2 In the **Size** settings window, locate the **Geometric Entity Selection** section.

3 From the **Geometric entity level** list, choose **Boundary**.

4 Select Boundary 24 only.

5 Locate the **Element Size** section. Click the **Custom** button.

6 Locate the **Element Size Parameters** section. Select the **Minimum element size** check box.

7 In the associated edit field, type `1e-5`.

Size 4

1 Right-click **Free Tetrahedral 1** and choose **Size**.

2 In the **Size** settings window, locate the **Geometric Entity Selection** section.

3 From the **Geometric entity level** list, choose **Edge**.

4 Select Edges 50 and 138 only.

5 Locate the **Element Size** section. Click the **Custom** button.

6 Locate the **Element Size Parameters** section. Select the **Minimum element size** check box.

7 In the associated edit field, type `1e-5`.

Size

1 In the **Model Builder** window, under **Component 1>Mesh 1** click **Size**.

2 In the **Size** settings window, locate the **Element Size** section.

3 From the **Predefined** list, choose **Finer**.

4 Click the **Build All** button.

You should now see the following meshed geometry.

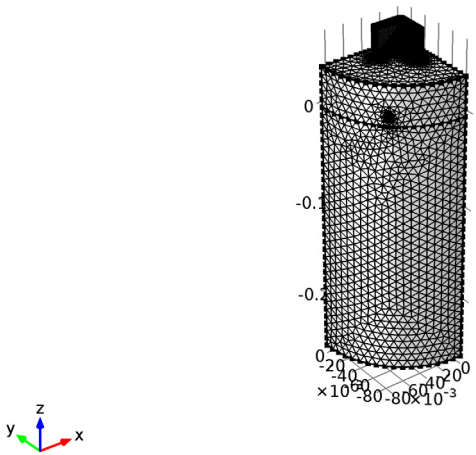

STUDY 1

Step 1: Stationary

Use two stationary study steps. Solve first for the fluid dynamics and heat transfer to determine the thermal load and the pressure load and then for the structural mechanics.

1 In the **Model Builder** window, expand the **Study 1** node, then click **Step 1: Stationary**.

2 In the **Stationary** settings window, locate the **Physics and Variables Selection** section.

3 In the table, enter the following settings:

Physics	Solve for	Discretization
Solid Mechanics	×	physics

Step 2: Stationary 2

1 On the **Study** toolbar, click **Study Steps** and choose **Stationary>Stationary**.

2 In the **Stationary** settings window, locate the **Physics and Variables Selection** section.

3 In the table, enter the following settings:

Physics	Solve for	Discretization
Conjugate Heat Transfer	×	physics

For the structural analysis, use a memory efficient iterative solver to make it possible to solve the problem also on computers with limited memory.

Solver 1

1 On the **Study** toolbar, click **Show Default Solver**.

2 In the **Model Builder** window, expand the **Study 1>Solver Configurations>Solver 1>Stationary Solver 2** node.

3 Right-click **Study 1>Solver Configurations>Solver 1>Stationary Solver 2** and choose **Iterative**.

4 On the **Home** toolbar, click **Compute**.

RESULTS

Data Sets

Modify the first default plot to see the velocity field and streamlines at the profile section (Figure 4).

1 In the **Model Builder** window, under **Results>Data Sets** right-click **Solution 2** and choose **Add Selection**.

2 In the **Selection** settings window, locate the **Geometric Entity Selection** section.

3 From the **Geometric entity level** list, choose **Domain**.

4 Select Domains 3 and 4 only.

Velocity (nitf)

1 In the **Model Builder** window, under **Results** click **Velocity (nitf)**.

2 In the **3D Plot Group** settings window, locate the **Data** section.

3 From the **Data set** list, choose **Solution 2**.

4 In the **Model Builder** window, expand the **Velocity (nitf)** node, then click **Slice 1**.

5 In the **Slice** settings window, locate the **Plane Data** section.

6 From the **Plane** list, choose **XY-planes**.

7 From the **Entry method** list, choose **Coordinates**.

8 In the **Z-coordinates** edit field, type `0.0151`.

9 On the **3D plot group** toolbar, click **Plot**.

10 In the **Model Builder** window, right-click **Velocity (nitf)** and choose **Streamline**.

11 In the **Streamline** settings window, locate the **Expression** section.

12 Click **Velocity field (Spatial) (u,v,w)** in the upper-right corner of the section. Locate the **Streamline Positioning** section. From the **Positioning** list, choose **Start point controlled**.

13 Locate the **Coloring and Style** section. From the **Line type** list, choose **Tube**.

14 Click to expand the **Inherit style** section. Locate the **Inherit Style** section. From the **Plot** list, choose **Slice 1**.

15 Right-click **Results>Velocity (nitf)>Streamline 1** and choose **Color Expression**.

16 In the **Color Expression** settings window, locate the **Expression** section.

17 Click **Velocity magnitude (nitf.U)** in the upper-right corner of the section. On the **3D plot group** toolbar, click **Plot**.

To get a better view, rotate the geometry in the **Graphics** window and use the **Zoom Box** tool to obtain a close-up. You can preserve a view for a plot by creating a **View** feature node as follows:

18 In the **Model Builder** window's toolbar, click the **Show** button and select **Advanced Results Options** in the menu.

19 In the **Model Builder** window, expand the **Results>Velocity (nitf)>Streamline 1** node.

20 Right-click **Results>Views** and choose **View 3D**.

21 Use the **Graphics** toolbox to get a satisfying view.

22 In the **Model Builder** window, under **Results>Views** click **View 3D 2**.

23 In the **View 3D** settings window, locate the **View** section.

24 Select the **Lock camera** check box.

Next, apply the view to the velocity plot.

Velocity (nitf)

1 In the **Model Builder** window, under **Results** click **Velocity (nitf)**.

2 In the **3D Plot Group** settings window, locate the **Plot Settings** section.

3 From the **View** list, choose **View 3D 2**.

4 On the **3D plot group** toolbar, click **Plot**.

Temperature (nitf)

The second default plot shows the temperature (Figure 3).

1 On the **3D plot group** toolbar, click **Plot**.

Stress (solid)

The last plot shows the von Mises stress and deformation distribution in the container. To reproduce the Figure 5, apply the View 3D 2.

1 In the **Model Builder** window, under **Results** click **Stress (solid)**.

2 In the **3D Plot Group** settings window, locate the **Plot Settings** section.

3 From the **View** list, choose **View 3D 2**.

4 On the **3D plot group** toolbar, click **Plot**.